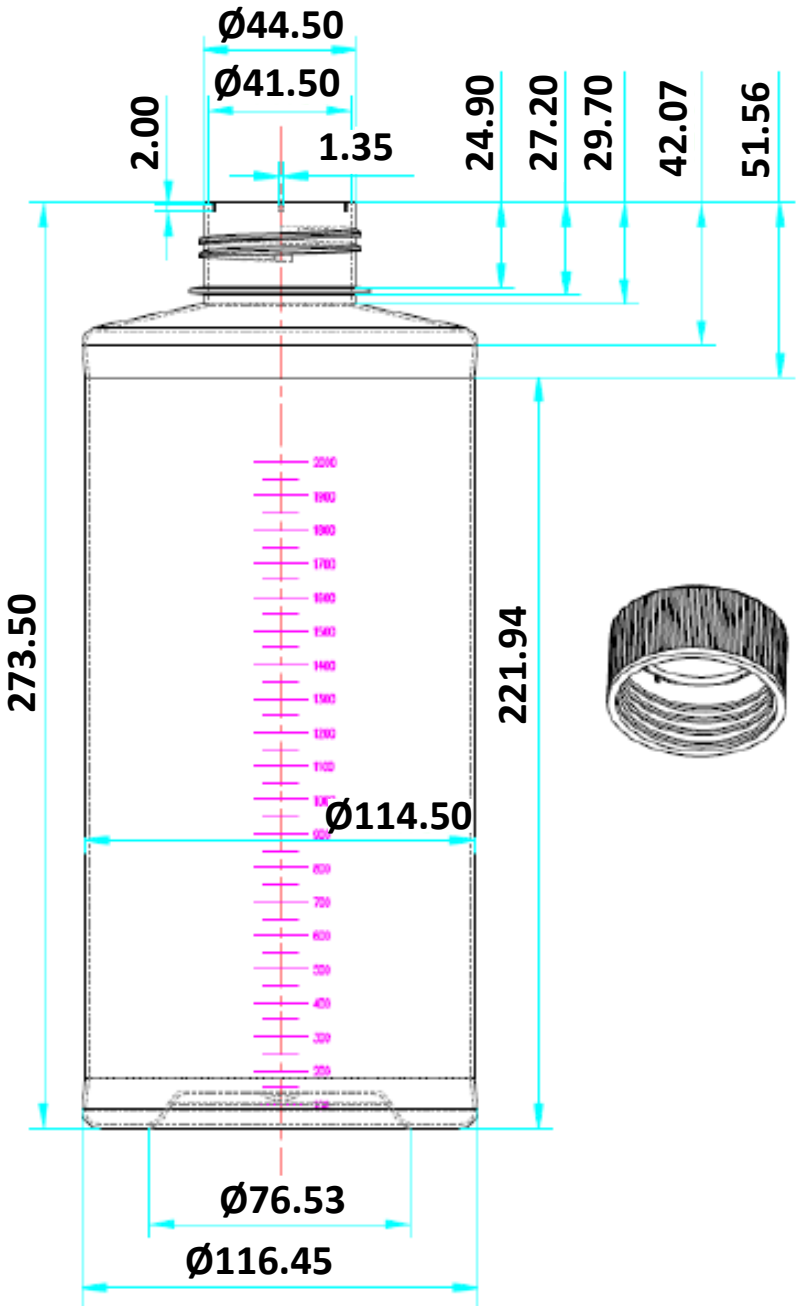

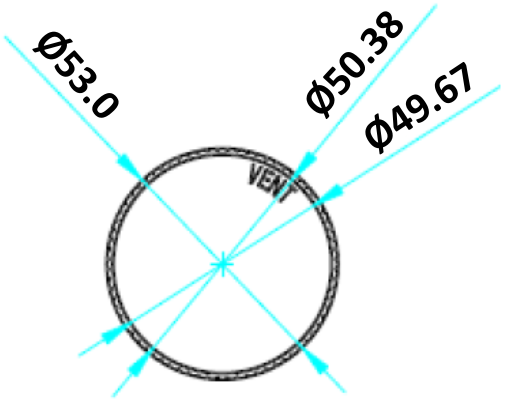

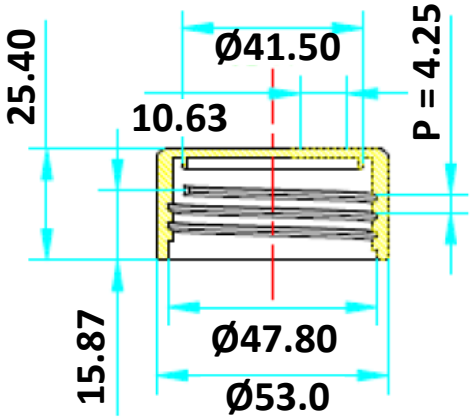

Dimensions in mm

CELLTREAT®
SCIENTIFIC PRODUCTS

850cm^2 Roller Bottle, Non-Vented
10/27/22, MM